T: 0800 387 227
F: 09 435 2432

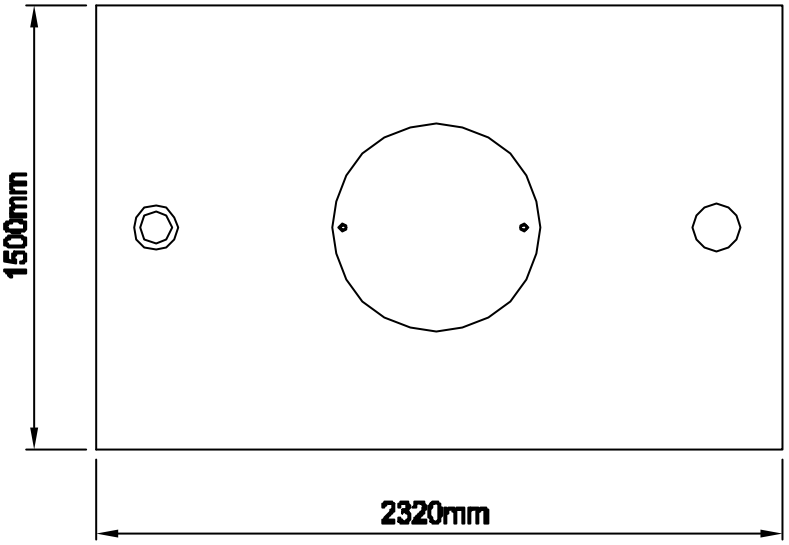


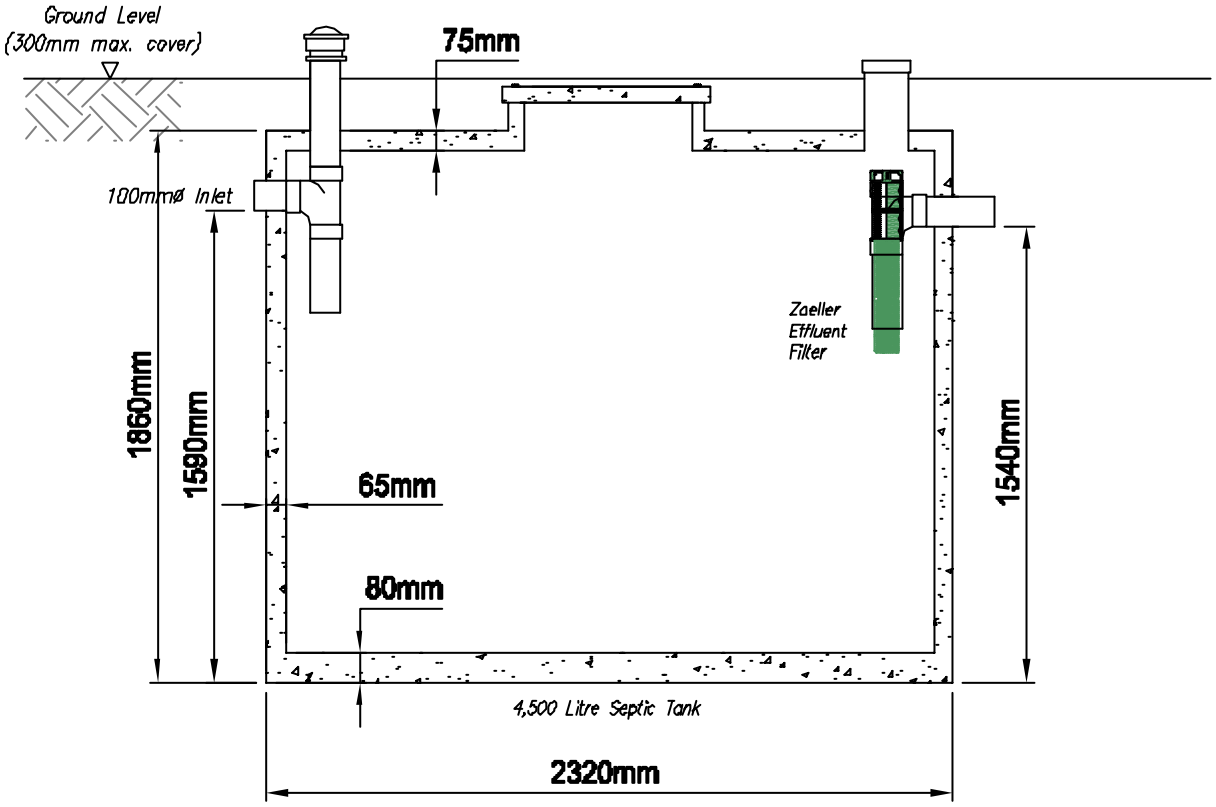


© COPYRIGHT
THIS DESIGN AND DRAWING IS COPYRIGHT OF DURACRETE PRODUCTS LTD. IT MAY NOT BE COPIED OR REPRODUCED IN ANY FORMAT OR IN ANY MEDIUM WITHOUT THE WRITTEN AUTHORISATION FROM DURACRETE PRODUCTS LTD.

# 4,500L Single Chamber Septic Tank